INSTALLATION INSTRUCTIONS



FORD MAVERICK 2.0L | **PART NO. 19836**

BILL OF MATERIALS:

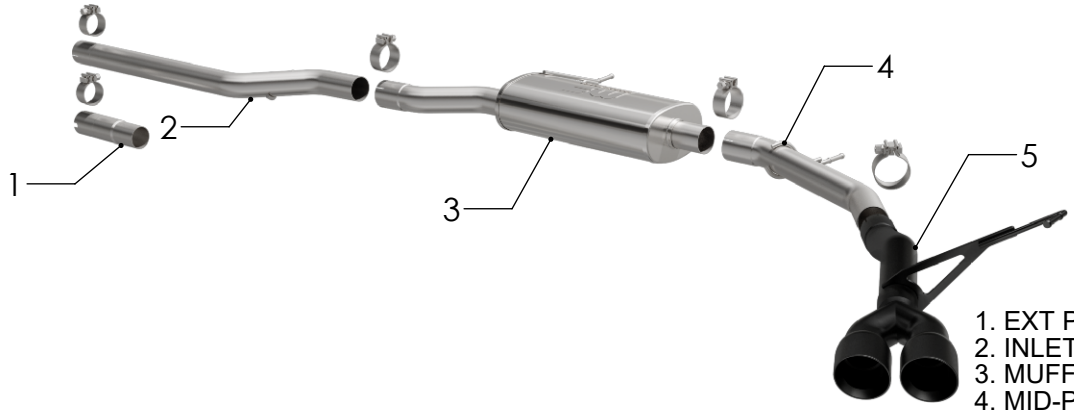

1. EXT PIPE
2. INLET PIPE ASSEMBLY
3. MUFFLER ASSEMBLY
4. MID-PIPE ASSEMBLY
5. TAILPIPE ASSEMBLY



WEAR SAFTEY GLASSES



READ INSTRUCTIONS THOROUGHLY BEFORE INSTALLING PRODUCT

SHOP SUPPLIES:



SPRAY LUBRICANT

To ease removal of existing exhaust components (especially on older vehicles) spray penetrating lubricant on all fasteners and hangers/insulators that will be loosened or removed and let soak before disassembly.

HARDWARE KIT:

1. [2] 2.36" Band Clamp
2. [3] 2.50" Band Clamp
3. [1] Hanger Clamp Assy

MINIMUM REQUIRED TOOLS:



Saw/Cutting Device



15mm



Hanger Tool (Or Pry Bar)

MAGNAFLOW RECOMMENDS PROFESSIONAL INSTALLATION ON ALL THEIR PRODUCTS

WARNING: When working on, under, or around any vehicle exercise caution. Please allow the vehicle's exhaust system to cool before removal, as exhaust system temperatures may cause severe burns. If working without a lift always consult vehicle manual for correct lifting specifications. Always wear safety glasses and ensure a safe work area. Serious injury or death could occur if safety measures are not followed.

ATTENTION: Always install any supplied band or V-band clamps to the proper torque specifications of 40-45 ft-lbs for band clamps and 70 in-lbs for V-band clamps. Over tightening will result in the clamp breaking and will NOT be warranted by MagnaFlow.

MAGNAFLOW: 1901 Corporate Centre Dr - Oceanside, CA 92056 | 1(800)990-0905
Technical Support: 1(800) 959-9226 | Email: moreinfo@magnaflow.com

INSTALLATION INSTRUCTIONS

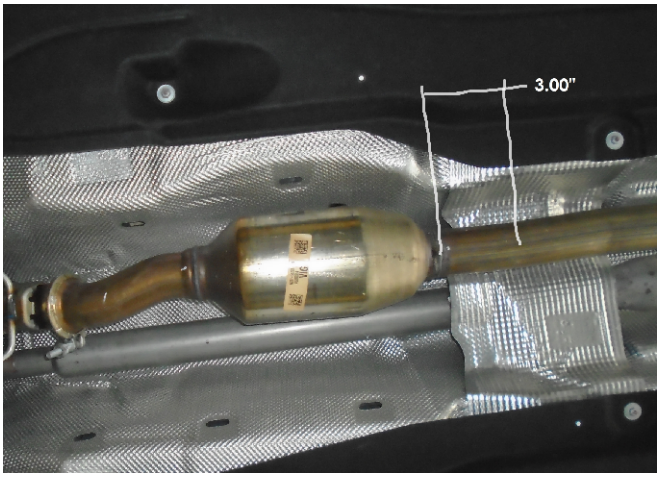

Begin removal of the OE exhaust system. If your vehicle is the **GPF** version, unclamp the OE pipe rearward of the catalytic converter. If your vehicle is the **non-GPF** version, cut the OE pipe 3.00" behind the weld rearward of the catalytic converter as shown.

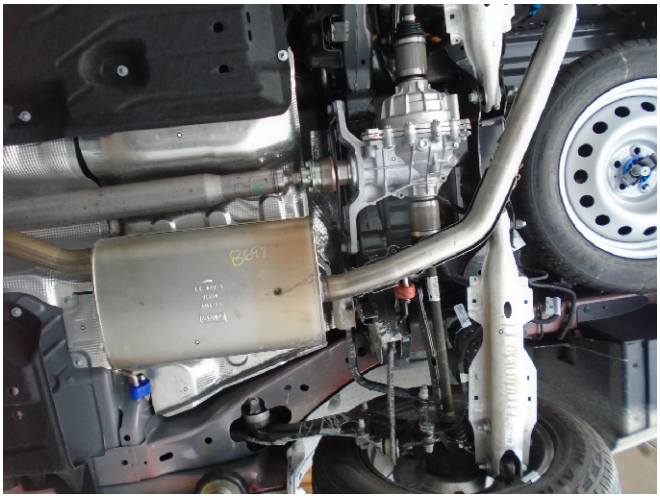



With the system supported, working front to rear disengage the hangers from rubber insulators and remove the OE system. Do not discard or damage the rubber insulators as they will be used to install the new system.



Begin installation of your new MAGNAFLOW system. If your vehicle is the **GPF** version, attach the Inlet Pipe Assembly to the catalytic converter outlet using the supplied clamp. Engage the welded hanger to the rubber isolator. Keep all clamps loose until final adjustment.



MAGNAFLOW: 1901 Corporate Centre Dr - Oceanside, CA 92056 | 1(800)990-0905
Technical Support: 1(800) 959-9226 | Email: moreinfo@magnaflow.com

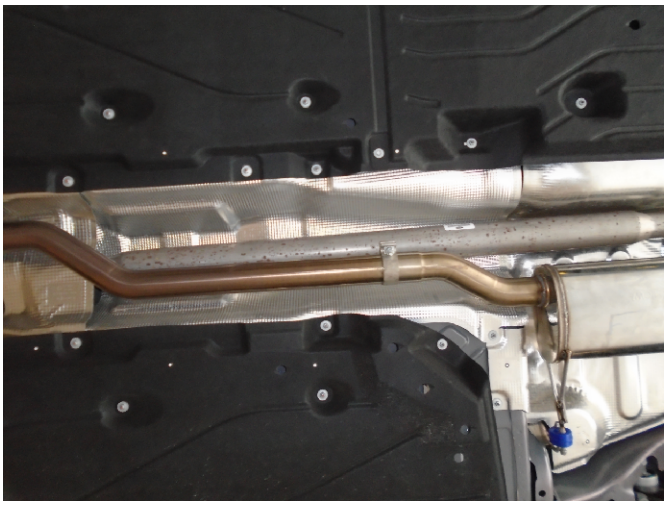



Step 7: Next loosely install the Tail-Pipe Assembly using the supplied clamp. The supplied Hanger Clamp Assy is for AWD models only. Engage the welded hanger to the rubber insulator.

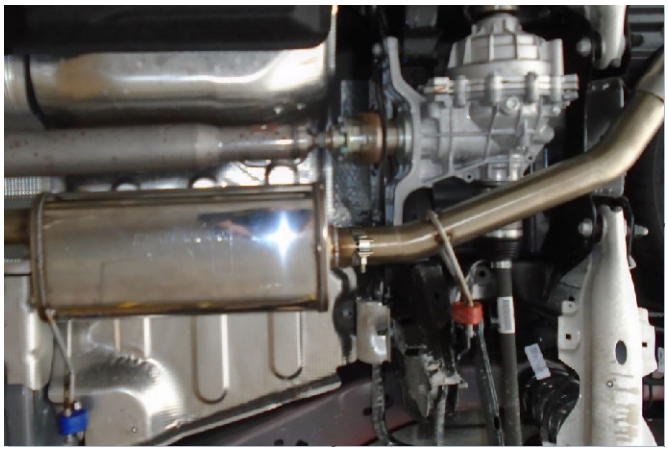



MAGNAFLOW: 1901 Corporate Centre Dr - Oceanside, CA 92056 | 1(800)990-0905
Technical Support: 1(800) 959-9226 | Email: moreinfo@magnaflow.com